ECO-SMARTZ AUTOMATIC TOUCH SCREEN FLEXURAL MACHINE

Standard: EN 12390-5, ASTM C78 & C293

Flexural Test

Our flexural frame has been designed to achieved minimum deflection at maximum pressures resulting in very high accuracy. Overall structure are rigid & compact. Using DC motor for more durability, low noise pollution, low oil temperature & low power consumption.

Touch Screen Smartz Controller V 1.1

- Clear, easy to read, sensitive & large LCD touch screen display of 155mm(W) x 85 mm(H)
- Maximum force hold facility with real time Force vs Time graph display.
- User input test number, age, weight & density for complete sample information.
- Real time speed indicator bar for better current speed reference for better control
- Manual loading & conditional automatic loading for compression machines with suitable DC motor control system.
- Automatic conversion from kN to Mpa according to the chosen sample types.

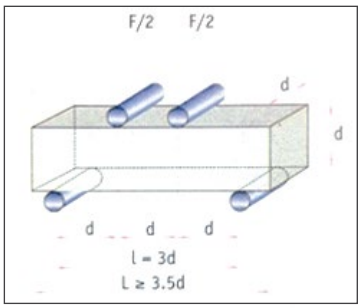

4 Points Bend Setup
(2 Points Loading)

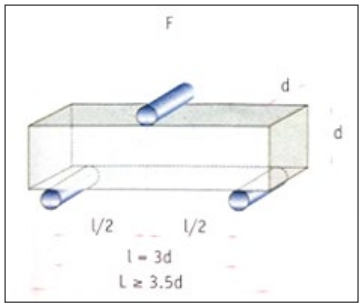

3 Points Bend Setup
(Centre Point Loading)

Technical Specifications :

Model Number	NL 4008 X / 004
Max. Capacity	150 kN x 0.1 kN Sensitivity
Load Sensor Capacity	50 kPa
Roller Size (mm)	38 Dia. x 160 mm Lg.
Max. Vertical Clearance	165 mm
Max. Horizontal Clearance	160 mm
Max. Piston Travel	80 mm
Loading span	100 mm / 150 mm or Single
Support span	300 mm / 450 mm
Frame Dimension	510 (L) x 510 (W) x 1350 (H) mm
Console Unit Dimension	420 (W) x 380 (L) x 1350 (H) mm
Frame Weight	240 kg
Console Unit Weight	115 kg
Power	220~240 V, ½ Ph, 50/60 Hz, 2.5 A

Set Consists Of :

Model Number	Parts Description	Qty
NL DCC – 2K	DC Power Control Console	1no.
NL 4008 X / 001 – P 001	150 kN Hydraulic Flexural Frame	1no.



Copyright 2026 NL Scientific Instruments Sdn. Bhd. All Rights Reserved. Revision 4(All information in this catalogue only for customer's reference and not for quotation. Design and dimension maybe change without prior notice.)